

Dallas Arnold

Davis Award

Applied Physics/Dual-Degree Engineering Major

First Year ARCS Scholar

MOREHOUSE COLLEGE

Precision Engineering for Optical Diagnostics

During my research at Lawrence Livermore National Laboratory, I designed and fabricated custom connectors for a streak-camera diagnostic system. I used computer-aided design and additive manufacturing to create light-tight components that securely positioned optical elements and maintained direct contact between fiber-optic interfaces.

A streak camera converts extremely fast optical signals into time-resolved images, making precise optical alignment essential to its operation

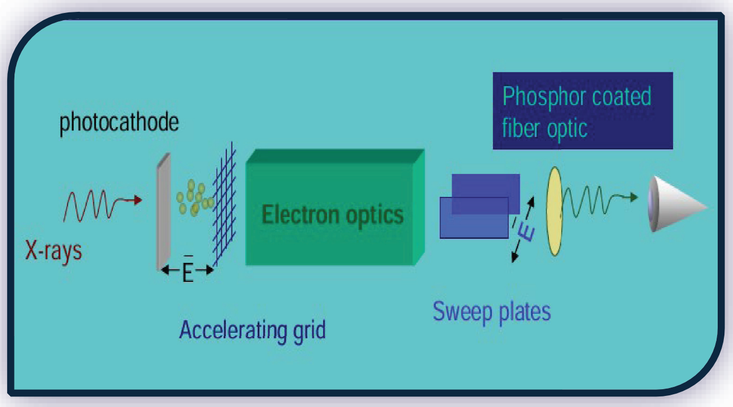

The T-REX streak camera is a specialized diagnostic system used to capture high-speed optical measurements in experimental research

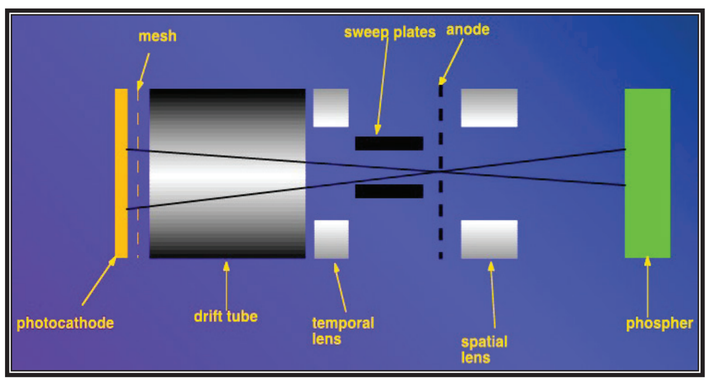

Connecting the streak camera to the CCD required custom components capable of maintaining alignment, stability, and secure optical interfaces

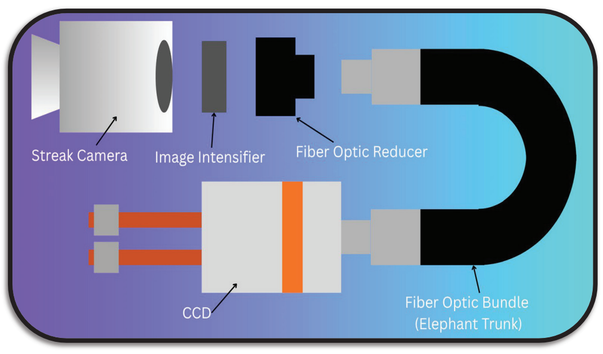

Goal

- Design light-tight connectors that securely hold each component in place and maintain direct contact between the fiber-optic interfaces.

Physical measurements and initial sketches were translated into parametric CAD models tailored to the existing optical system

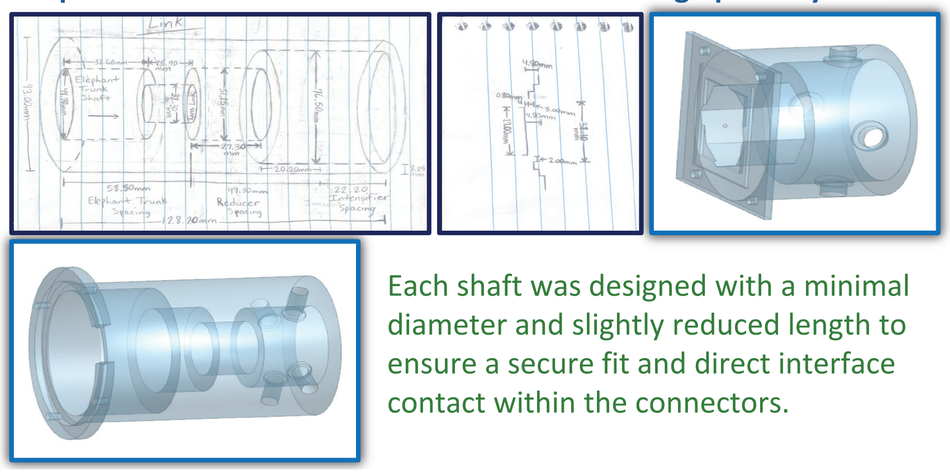

Each shaft was designed with a minimal diameter and slightly reduced length to ensure a secure fit and direct interface contact within the connectors.

The finalized CAD models were prepared for additive manufacturing and converted into physical prototypes for evaluation and testing

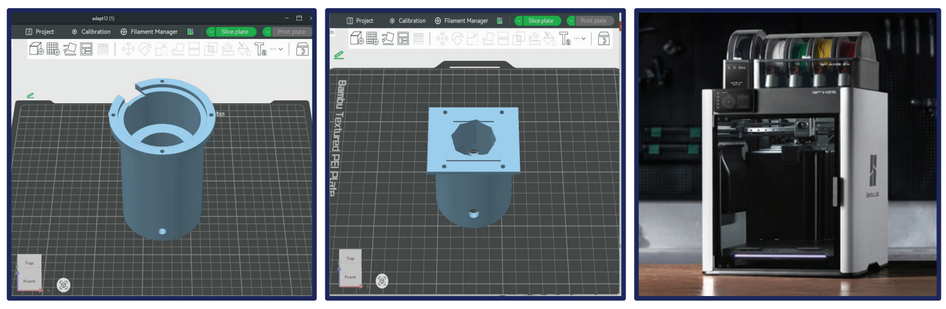

Structural supports were added to the models before printing to prevent deformation and maintain the intended geometry of each component.

Engineering Takeaway

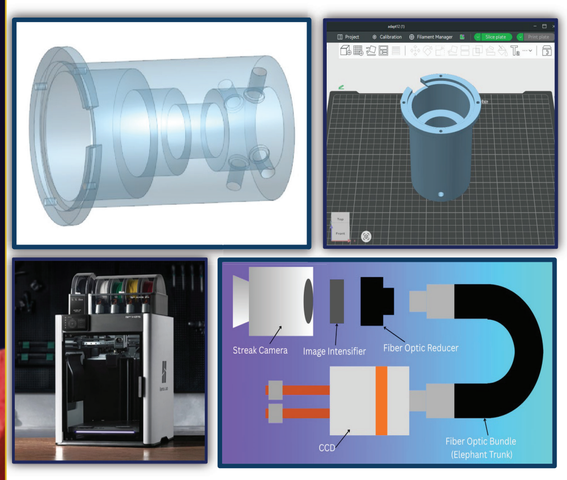

- Designed components around tight dimensional and optical constraints
- Translated a physical experimental challenge into a practical engineering solution
- Used additive manufacturing to turn CAD designs into physical components for testing
- Strengthened skills that I can carry forward into mechanical and aerospace engineering

SCHOLAR AWARDS CELEBRATION

250 Years of American Science: Honoring Those Who Advance It

ARCS ADVANCING SCIENCE IN AMERICA®